INDUCTION MOTOR	SPECIFICATION	MODEL
2-SP-90491		K9IP90NH-T5-01S

1. ELECTRICAL SPEC

1-1	Type	3 PHASE INDUCTION MOTOR	
1-2	Voltage	3Ø 230/50	V/㎐
1-3	No. of Poles	4	P
1-4	Output	90	W
1-5	Rated Torque	6.5	Kgf · Cm
1-6	Capacitor	–	㎌
1-7	Duty	Continuous	
1-8	Starting Torque	24.5	Kgf · Cm Min.
1-9	Stall Torque	24.5	Kgf · Cm Min.
1-10	Rated Speed	1350	r/min
1-11	Rated Current	0.62	A ± 20%
1-12	Temperature Rise	85	deg Max.
1-13	Insulation Class	B	
1-14	Insulation Resistance	100㏁ Min. (at DC 500V Megger Tester)	
1-15	Dielectric Strength	AC 1500V 60㎐ RMS 1Minute(Cutoff Current 10mA Max.)	
1-16	Lead Wire	UL Style 3271, AWG20	
1-17	Protective Device	Thermal Protector (130℃)	

2. MECHANICAL

2-1	Run Out	0.05 ㎜
2-2	Noise	50dB(A) Max. (at No Load Motor Side 30㎝)
2-3	Bearing	BALL BEARING 6201ZZ, 6000ZZ
2-4	Shaft Thrust	0.5㎜ Max.
2-5	Dimensions	DWG No. 2-SA-02212
2-6	Mount	Horizontal
2-7	Ambient Condition	Temperature -10~40℃, Humidity under 85%RH
2-8	Exterior	No scratch, No particle, Standard color
2-9	Degree of protection	IP65

3. CONNECTION DIAGRAM

VIEW FROM THE OUTPUT SHAFT

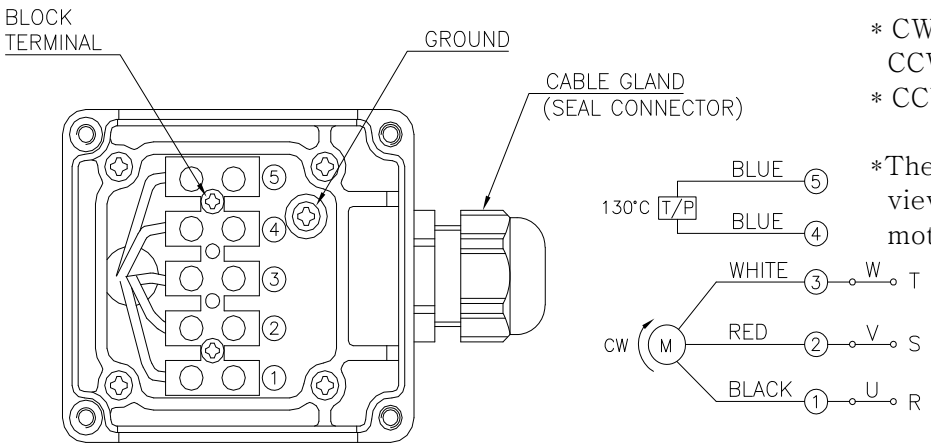

* CW=Clock Wise, CCW=Counter Clock Wise
* CCW : To Change any two connections amoung U,V and W
* The direction of motor rotation is as viewed from the front shaft end of the motor.

DESIGNED	18. 01. 29	D.Y Lee	GGM GLOBAL GEARED MOTOR	K9IP90NH-T5-01S
CHECKED				
APPROVED	18. 01. 29	B.I CHUNG		2-SP-90491

No.	REMARK	Rev No.	DATE	SIGN
A				
B				
C				
D				

● TERMINAL BOX DETAIL

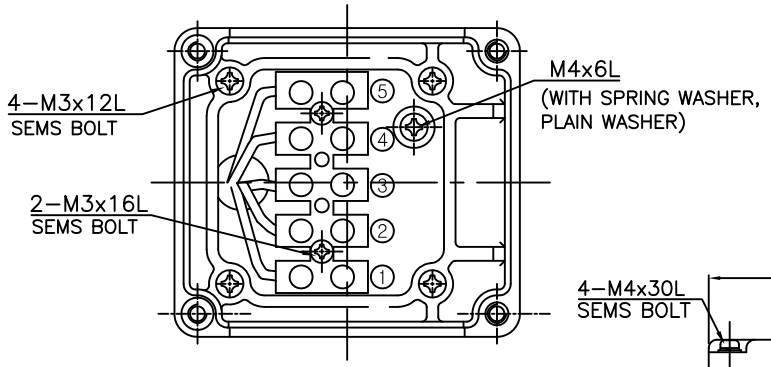

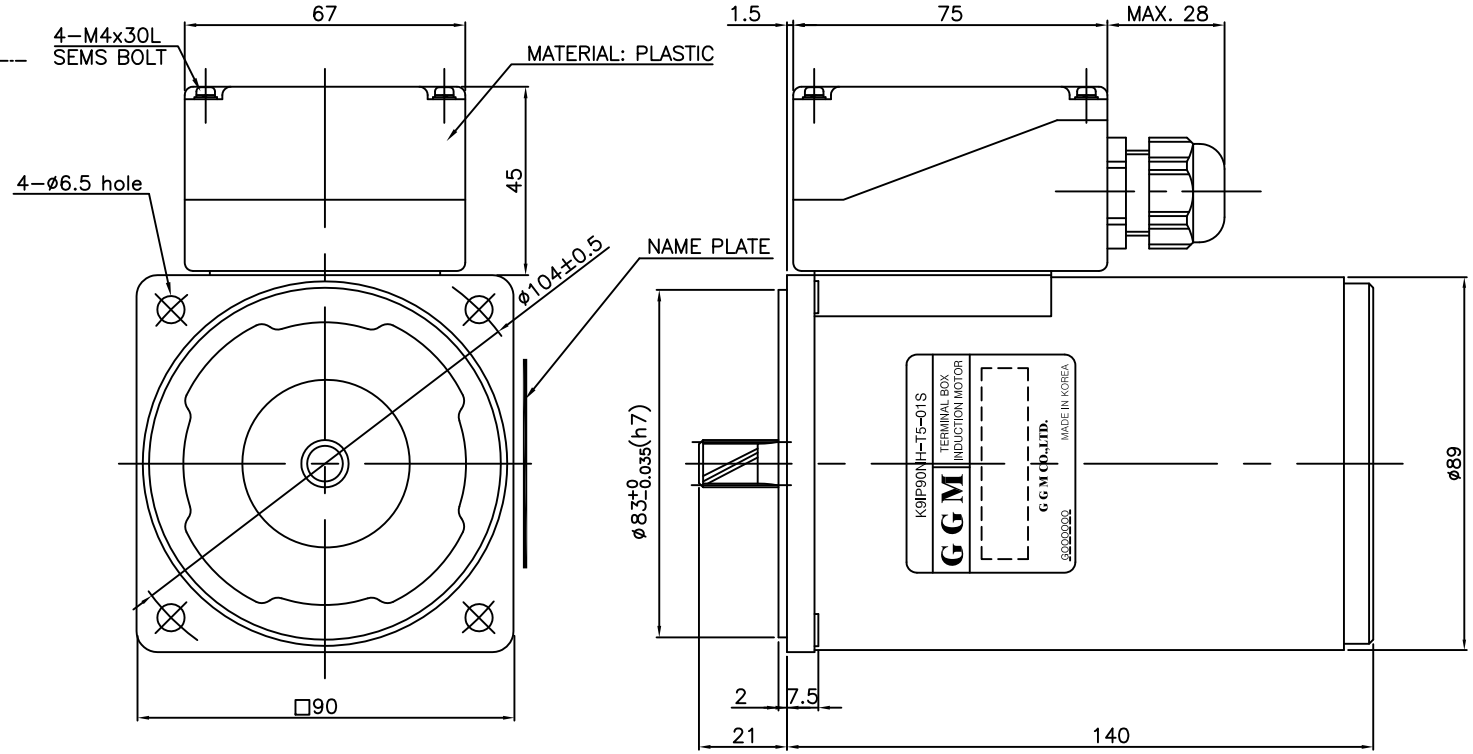

● MOTOR NAME PLATE

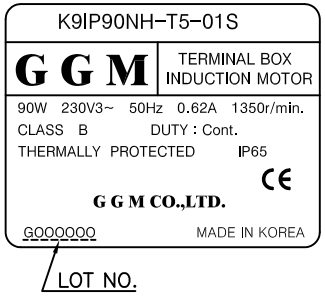

● CONNECTION DIAGRAM

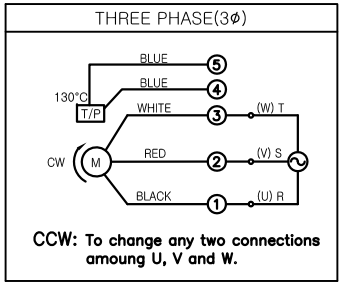

※ The direction of motor rotation is as viewed from the front shaft end of the motor.

< GAPP AUTO >

DRAW	18. 01. 29	D.Y LEE	SCALE :1 /1.3	PART NAME: OUTLINE
DESIGNED			UNIT : mm	
CHECKED				APPLICATION MODEL: K9IP90NH−T5−01S
APPROVED	18. 01. 29	B.I CHUNG		
G G M GLOBAL GEARED MOTOR			RELATION DWG.	DWG NO. 2−SA−02212

A3 (420x297)